PLT®

Since 1978

UHF(M)

Specialized Production

CONNECTORS

CROSS REFERENCE

MODEL	PAGE	NOTE	MODEL	PAGE	NOTE	MODEL	PAGE	NOTE
U-501A	P-14	MP-58	**U-514A**	P-15	MP-58	**U-526B**	P-13	MP-59
U-501B	P-14	MP-59	**U-514B**	P-15	MP-59	**U-527**	P-22	M-R
U-502A	P-15	MP-58	**U-515**	P-18	MP-RCAJ	**U-528**	P-19	MJ-FJ
U-502B	P-15	MP-59	**U-516**	P-20	M-T-JJJ	**U-529**	P-16	
U-503A	P-6	MP-58	**U-517**	P-18	M-A-JJ	**U-530**	P-16	
U-503B	P-6	MP-59	**U-517A**	P-18	M-A-JJ	**U-531**	P-22	M-PR
U-503C	P-6	RG-58	**U-518**	P-16		**U-532**	P-22	M-BR
U-503D	P-6	RG-59	**U-519A**	P-8	M-LJ-58	**U-533**	P-21	
U-504	P-18	M-A-JJ	**U-519B**	P-8	M-LJ-59	**U-534**	P-19	MP-FJ
U-504A	P-18	M-A-JJ	**U-519C**	P-8	M-LJ-8D	**U-535**	P-16	
U-504B	P-18	M-A-JJ	**U-519D**	P-8	M-LJ-5D	**U-536A**	P-7	MP-58
U-505	P-16		**U-519E**	P-8	M-LJ-1.5D	**U-536B**	P-7	MP-59
U-506	P-22	M-BR	**U-519F**	P-10		**U-536C**	P-7	MP-8D
U-507	P-11	M-LA-PJ	**U-519G**	P-10		**U-536D**	P-7	MP-10D
U-507A	P-11		**U-520**	P-20	M-TA-JPJ	**U-537A**	P-6	MP-58
U-508	P-18	M-J-RCAP	**U-521**	P-22	M-BR	**U-537B**	P-6	MP-59
U-509A	P-8	M-LJ-58	**U-522A**	P-9	M-LJ-58	**U-537C**	P-6	MP-5C-2V
U-509B	P-8	M-LJ-59	**U-522B**	P-9	M-LJ-59	**U-537D**	P-6	MP-7C-2V
U-509C	P-8	M-LJ-8D	**U-523A**	P-8	M-LJ-58	**U-537E**	P-6	MP-8U
U-509D	P-8	M-LJ-5D	**U-523B**	P-8	M-LJ-59	**U-538A**	P-6	MP-58
U-509E	P-8	M-LJ-1.5D	**U-523C**	P-8	M-LJ-8D	**U-538B**	P-6	MP-59
U-510	P-18	M-A-PP	**U-523D**	P-8	M-LJ-5D	**U-538C**	P-6	MP-5D
U-511	P-22	M-BR	**U-523E**	P-8	M-LJ-1.5D	**U-538D**	P-6	MP-8D
U-512	P-22	M-R	**U-524A**	P-13	MP-58	**U-540A**	P-7	MP-58
U-513A	P-13	MP-58	**U-524B**	P-13	MP-59	**U-540B**	P-7	MP-59
U-513B	P-13	MP-59	**U-525A**	P-15	MP-58	**U-540C**	P-7	MP-8D
U-513C	P-13	MP-8D	**U-525B**	P-15	MP-59	**U-540D**	P-7	MP-10D
			U-526A	P-13	MP-58			

CROSS REFERENCE

MODEL	PAGE	NOTE	MODEL	PAGE	NOTE	MODEL	PAGE	NOTE
U-541A	P-14	MP-3D	**U-553D**	P-8	M-LJ-5D	**U-562**	P-20	MJ-BNCP
U-541B	P-14	MP-5D	**U-553E**	P-8	M-LJ-1.5D	**U-563**	P-19	MJ-FP
U-541C	P-14	MP-8D	**U-554A**	P-9	M-LP-58	**U-564**	P-19	MJ-RCAJ
U-541D	P-14	MP-10D	**U-554B**	P-9	M-LP-59	**U-565**	P-19	MP-RCAP
U-541E	P-14	MP-12D	**U-555A**	P-8	M-LP-58	**U-566**	P-19	MJ-NP
U-542	P-19	MP-NJ	**U-555B**	P-8	M-LP-59	**U-567**	P-19	MP-NP
U-543A	P-13	M-J-58	**U-556A**	P-10	M-LP-3D	**U-568**	P-19	M-J-NJ
U-543B	P-13	M-J-59	**U-556B**	P-10	M-LP-5D	**U-569**	P-20	M-J-NJ
U-544A	P-7	M-J-58	**U-556C**	P-10	M-LJ-8D	**U-570**	P-19	MP-FP
U-544B	P-7	M-J-59	**U-556D**	P-10	M-LJ-10D	**U-571A**	P-7	MP-58
U-544C	P-7	M-J-5D	**U-556E**	P-10	M-LJ-12D	**U-571B**	P-7	MP-59
U-544D	P-7		**U-557A**	P-10	M-LJ-3D	**U-571C**	P-7	MP-5D
U-545	P-22	M-BR	**U-557B**	P-10	M-LJ-5D	**U-572A**	P-9	M-J-58
U-546	P-16		**U-557C**	P-10	M-LJ-8D	**U-572B**	P-9	M-J-59
U-547	P-22	M-BR	**U-557D**	P-10	M-LJ-10D	**U-572C**	P-9	M-J-8D
U-548A	P-13	M-P-58	**U-557E**	P-10	M-LJ-12D	**U-572D**	P-9	M-J-10D
U-548B	P-13	M-P-59	**U-558A**	P-7	M-J-58	**U-572E**	P-9	M-J-12D
U-548C	P-13	M-P-5D	**U-558B**	P-7	M-J-59	**U-573**	P-17	
U-549	P-18	M-A-JJ	**U-558C**	P-7	M-J-8D	**U-574**	P-17	
U-550A	P-14	M-J-3D	**U-558D**	P-7	M-J-10D	**U-575**	P-17	
U-550B	P-14	M-J-5D	**U-558E**	P-7	M-J-12D	**U-576**	P-17	MP-ANT
U-550C	P-14	M-J-8D	**U-559A**	P-15	MP-58	**U-577**	P-17	MP-ANT
U-550D	P-14	M-J-10D	**U-559B**	P-15	MP-59	**U-578**	P-17	MP-ANT
U-550E	P-14	M-J-12D	**U-559C**	P-15	MP-8D	**U-579A**	P-12	MP-58
U-551	P-22	M-PR	**U-559D**	P-15	MP-10D	**U-579B**	P-12	MP-59
U-553A	P-8	M-LJ-58	**U-559E**	P-15	MP-12D	**U-579C**	P-12	M-P-8D
U-553B	P-8	M-LJ-59	**U-560**	P-20	MP-BNCP	**U-579D**	P-12	MP-5D
U-553C	P-8	M-LJ-8D	**U-561**	P-18	M-PR	**U-579E**	P-12	MP-1.5D

CROSS REFERENCE

MODEL	PAGE	NOTE	MODEL	PAGE	NOTE	MODEL	PAGE	NOTE
U-580A	P-14	MP-8D	**U-593A**	P-11	M-LJ-1.5D			
U-580B	P-14	MP-58	**U-595A**	P-20	MP-TJ			
U-580C	P-14	MP-59	**U-596A**	P-12	MP-7C-2V			
U-580D	P-14	MP-8D	**U-596B**	P-12	MP-5C-2V			
U-580E	P-14	MP-10D	**U-597**	P-20				
U-581	P-21	M-BR	**U-598**	P-20				
U-582A	P-12	MP-58	**Q-035**	P-15	MP-TJ			
U-582B	P-12	MP-59	**U-C1**	P-21	M-JC			
U-582C	P-12	MP-8D	**U-C2**	P-21	M-JC			
U-582D	P-12	MP-5D	**U-C3**	P-21	M-PC			
U-582E	P-12	M-LJ-58	**U-C4**	P-21	M-PC			
U-583	P-22	MP-1.5D	**U-C5**	P-21	M-JC			
U-584A	P-12	M-J-58	**U-C6**	P-20	M-JC			
U-584B	P-12	M-J-59						
U-585	P-9	M-J-58						
U-586	P-9	M-J-59						
U-586C	P-10	M-J-5D						
U-587A	P-12	MP-58						
U-587B	P-12	MP-8D						
U-587C	P-12	MP-7C-2V						
U-588	P-20							
U-589	P-21							
U-590	P-21							
U-591A	P-11	M-LJ-58						
U-592A	P-11	M-J58						
U-592B	P-11	M-J-59						
U-592C	P-11	M-J-8D						
U-592D	P-11	M-J-5D						
U-592E	P-11	M-J-1.5D						

ORDERING INFORMATION

U-501A - B S N T

INSULATION	D	DELRIN
	T	TEFLON
	P	PHENOL
	B	BAKELITE
CONTACT PLATING	G	GOLD
	N	NICKEL
	S	SILVER
BODY PLATING	C	CHROME
	G	GOLD
	N	NICKEL
	S	SILVER
BODY MATERIAL	B	BRASS
	Z	ZINC
	S	STAINLESS STEEL
APEX MODEL NO.		

Electrical Specifications

Standard cross reference : MIL-C-39012, JIS-C-5419
Voltage rating : AC 500V
Withstanding voltage : AC 1,000V one minute
Insulation resistance : 100MΩ min at DC 500V
Contact resistance : 3mΩ max. at DC 1A
Connection : M-type M16 x P1
UHF-type 5/8-24NEF-2A, 2B

UHF(M)

Series Interface

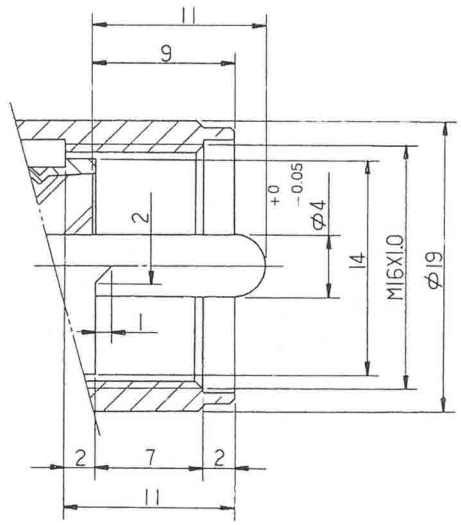

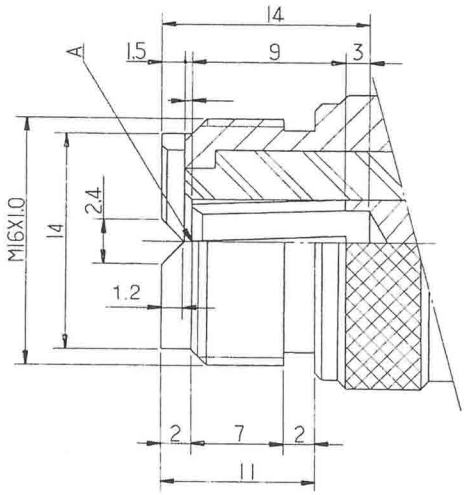

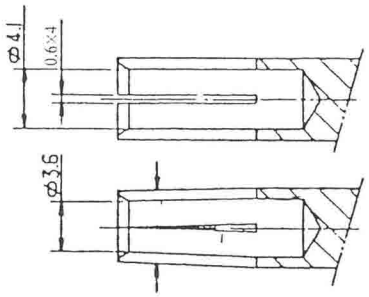

Molding Holes

APEX NO.	A	B	C	D
U-506		○		
U-509		○		
U-511		○		
U-512				
U-518	○		○	
U-519		○		
U-521			○	
U-522		○		
U-523		○		
U-527				○
U-531			○	
U-532		○		
U-545			○	
U-547		○		
U-549	○			
U-550	○			
U-551	○			
U-553		○		
U-556		○		
U-558	○			
U-561	○			

Molding Holes

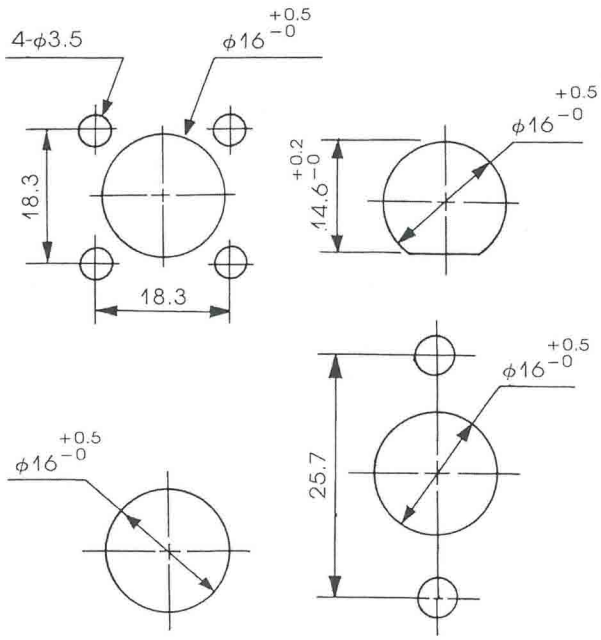

UHF(M) TWIST

U-503 UHF MALE TWIST TYPE (PL-259)

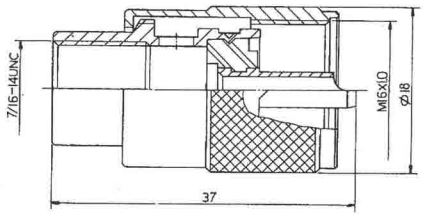

REDUCER (UG-175)

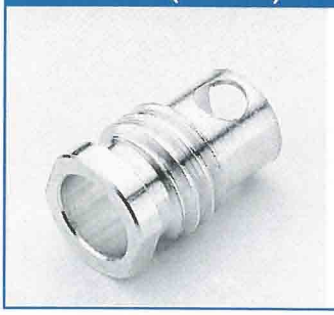

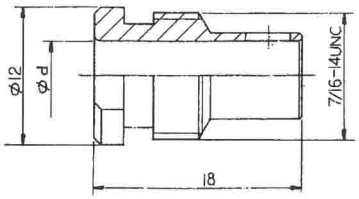

APEX NO.	FOR RG - ( ) /U ( ) D CABLE	ø d	AMPHENOL NO.
U-503A	58, 141, 142	5.4	175-U
U-503B	59, 62, 71, 140, 210	6.5	176-U

REDUCER (UG-176)

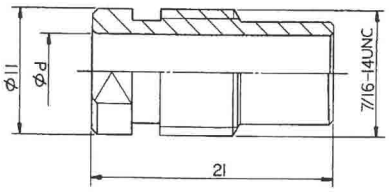

APEX NO.	FOR RG - ( ) /U ( ) D CABLE	ø d	AMPHENOL NO.
U-503C	58, 141, 142	5.4	175-U
U-503D	59, 62, 71, 140, 210	6.5	176-U

U-537 UHF MALE TWIST TYPE

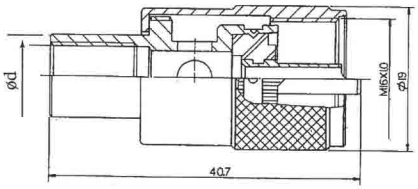

APEX NO.	FOR RG - ( ) /U ( ) D CABLE	ø d	AMPHENOL NO.
U-537A	58, 141, 142	5.4	-
U-537B	59, 62, 71, 140, 210	6.5	-
U-537C	5C 2V	8.3	-
U-537D	7C 2V	10.5	
U-537E	8/U	9.8	

U-538 UHF MALE TWIST TYPE

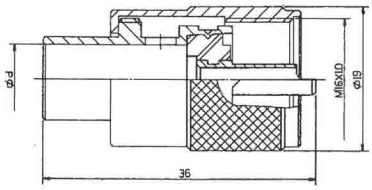

APEX NO.	FOR RG - ( ) /U ( ) D CABLE	ø d	AMPHENOL NO.
U-538A	58, 141, 142	5.4	-
U-538B	59, 62, 71, 140, 210	6.5	-
U-538C	5D	7.8	-
U-538D	8D	12.2	

UHF(M) TWIST

U-536 UHF MALE TWIST TYPE

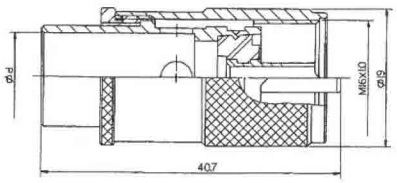

APEX NO.	FOR RG - ( ) /U ( ) D CABLE	ø d	AMPHENOL NO.
U-536A	58, 141, 142	5.4	-
U-536B	59, 62, 71, 140, 210	6.5	-
U-536C	8D	12.2	
U-536D	10D	14.4	

U-540 UHF MALE TWIST TYPE

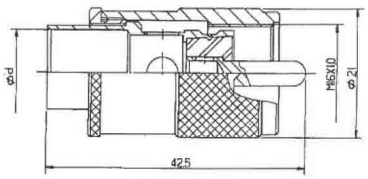

APEX NO.	FOR RG - ( ) /U ( ) D CABLE	ø d	AMPHENOL NO.
U-540A	58, 141, 142	5.4	-
U-540B	59, 62, 71, 140, 210	6.5	-
U-540C	8D	12.2	-
U-540D	10D	14.4	

U-544 UHF FEMALE TWIST TYPE

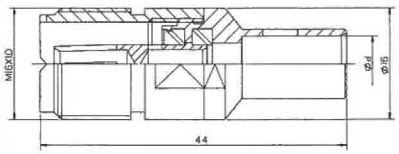

APEX NO.	FOR RG - ( ) /U ( ) D CABLE	ø d	AMPHENOL NO.
U-544A	58, 141, 142	5.4	-
U-544B	59, 62, 71, 140, 210	6.5	-
U-544C	5D	7.8	
U-544D	58	5.5	-

U-571 UHF MALE TWIST TYPE

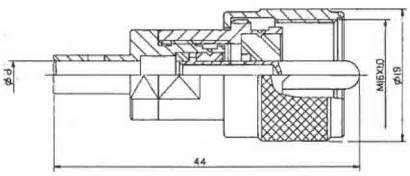

APEX NO.	FOR RG - ( ) /U ( ) D CABLE	ø d	AMPHENOL NO.
U-571A	58, 141, 142	5.4	-
U-571B	59, 62, 71, 140, 210	6.5	-
U-571C	5D	7.8	-

U-558 UHF FEMALE SCREW LOOK TYPE

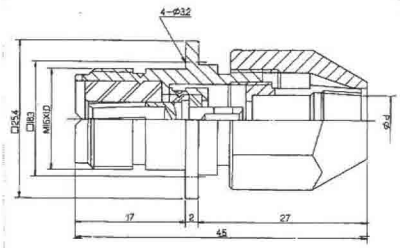

MOLDING HOLE: SEE P.10

APEX NO.	FOR RG - ( ) /U ( ) D CABLE	ø d	AMPHENOL NO.
U-558A	58, 141, 142	5.4	-
U-558B	59, 62, 71, 140, 210	6.5	
U-558C	8D	12.2	
U-558D	10D	14.4	
U-558E	12D	16.4	

PLT®
Since 1978

Reg. No. Q8718

UHF(M) TWIST

U-555 UHF MALE RIGHT ANGLE CAVE CRIMP TYPE

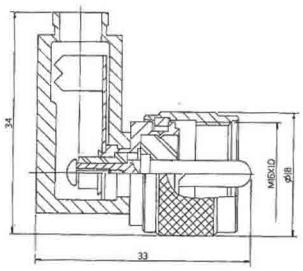

APEX NO.	FOR RG - ( ) /U ( ) D CABLE	ø d	AMPHENOL NO.
U-555A	58, 141, 142	3.2	-
U-555B	59, 62, 71, 140, 210	3.9	-

U-509 UHF FEMALE RIGHT ANGLE TWIST TYPE

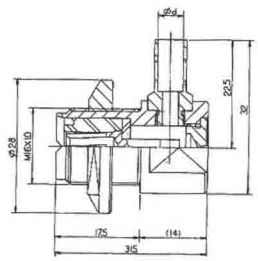

APEX NO.	FOR RG - ( ) /U ( ) D CABLE	ø d	AMPHENOL NO.
U-509A	58, 141, 142	5.4	-
U-509B	59, 62, 71, 140, 210	6.5	-
U-509C	8D	10.8	-
U-509D	5D	7.8	-
U-509E	1.5D	3.4	-

U-519 UHF FEMALE RIGHT ANGLE TWIST TYPE

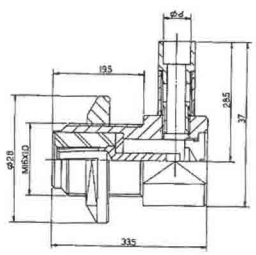

APEX NO.	FOR RG - ( ) /U ( ) D CABLE	ø d	AMPHENOL NO.
U-519A	58, 141, 142	5.4	-
U-519B	59, 62, 71, 140, 210	6.5	-
U-519C	8D	10.8	-
U-519D	5D	7.8	-
U-519E	1.5D	3.4	-

U-523 UHF FEMALE RIGHT ANGLE TWIST TYPE

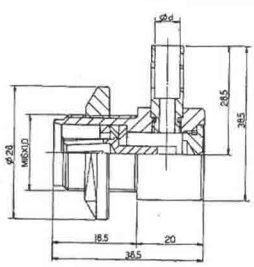

APEX NO.	FOR RG - ( ) /U ( ) D CABLE	ø d	AMPHENOL NO.
U-523A	58, 141, 142	5.4	-
U-523B	59, 62, 71, 140, 210	6.5	-
U-523C	8D	10.8	-
U-523D	5D	7.8	-
U-523E	1.5D	3.4	-

U-553 UHF FEMALE RIGHT ANGLE TYPE

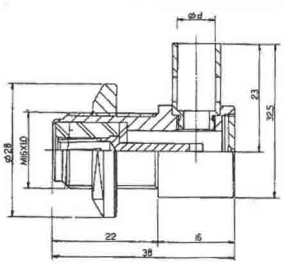

APEX NO.	FOR RG - ( ) /U ( ) D CABLE	ø d	AMPHENOL NO.
U-553A	58, 141, 142	5.4	-
U-553B	59, 62, 71, 140, 210	6.5	-
U-553C	8D	10.8	
U-553D	5D	7.8	
U-553E	1.5D	3.4	

UHF(M) TWIST

U-522 UHF FEMALE RIGHT ANGLE WATER-PROOF TYPE

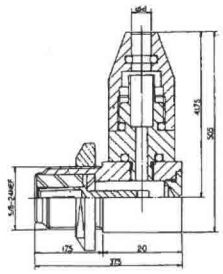

APEX NO.	FOR RG - ( ) /U ( ) D CABLE	ø d	AMPHENOL NO.
U-522A	58, 141, 142	5.4	-
U-522B	59, 62, 71, 140, 210	6.5	-

U-554 UHF MALE RIGHT ANGLE TYPE

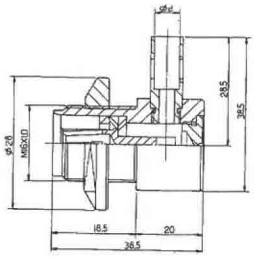

APEX NO.	FOR RG - ( ) /U ( ) D CABLE	ø d	AMPHENOL NO.
U-554A	58, 141, 142	5.4	-
U-554B	59, 62, 71, 140, 210	6.5	-

U-572 UHF COAXIAL CABLE CURRENT TAP TYPE

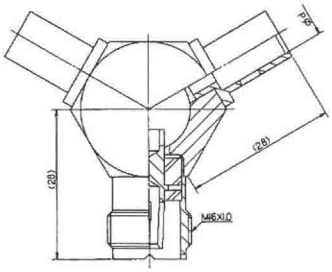

APEX NO.	FOR RG - ( ) /U ( ) D CABLE	ø d	AMPHENOL NO.
U-572A	58, 141, 142	5.4	-
U-572B	59, 62, 71, 140, 210	6.5	-
U-572C	8D	10.8	-
U-572D	5D	7.8	-
U-572E	1.5D	3.4	-

U-585 UHF FEMALE RIGHT ANGLE TYPE

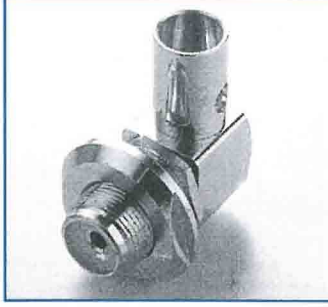

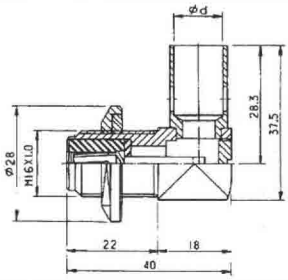

APEX NO.	FOR RG - ( ) /U ( ) D CABLE	ø d	AMPHENOL NO.
U-585	58U	3.3	

U-586 UHF FEMALE RIGHT ANGLESCREW LOOK TYPE

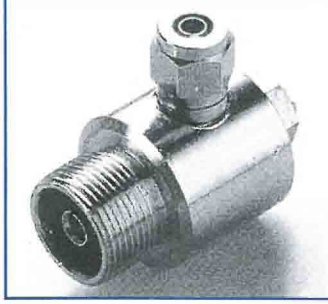

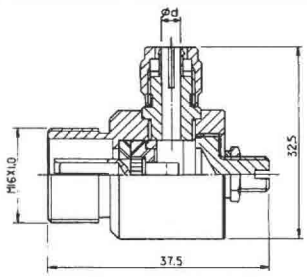

APEX NO.	FOR RG - ( ) /U ( ) D CABLE	ø d	AMPHENOL NO.
U-586	8D-2V	12	

U-519F UHF FEMALE RIGHT ANGLE TWIST TYPE

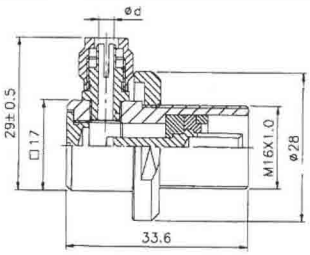

APEX NO.	FOR RG - ( ) /U ( ) D CABLE	ø d	AMPHENOL NO.
U-519F	58	3.2	-

U-519G UHF FEMALE RIGHT ANGLE TWIST TYPE

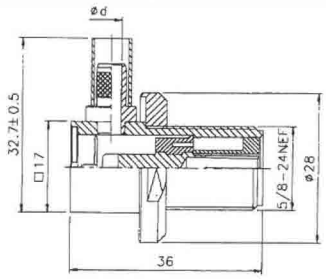

APEX NO.	FOR RG - ( ) /U ( ) D CABLE	ø d	AMPHENOL NO.
U-519G	58	3.2	-

U-586C UHF FEMALE RIGHT ANGLE SCREW LOOK TYPE

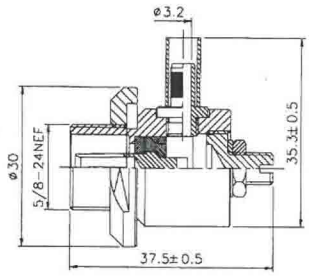

APEX NO.	FOR RG - ( ) /U ( ) D CABLE	ø d	AMPHENOL NO.
U-586C	58	3.2	-

U-556 UHF FEMALE RIGHT ANGLE CLAMP TYPE

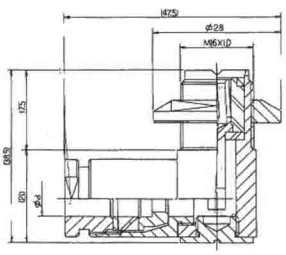

APEX NO.	FOR RG - ( ) /U ( ) D CABLE	ø d	AMPHENOL NO.
U-556A	3D	6.9	-
U-556B	5D	8.7	-
U-556C	8D	11.6	-
U-556D	10D	13.6	-
U-556E	12D	16.4	-

U-557 UHF MALE RIGHT ANGLE CLAMP TYPE

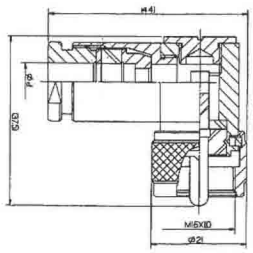

APEX NO.	FOR RG - ( ) /U ( ) D CABLE	ø d	AMPHENOL NO.
U-557A	3D	6.9	-
U-557B	5D	8.7	-
U-557C	8D	11.6	-
U-557D	10D	13.6	-
U-557E	12D	16.4	-

UHF(M)

U-507A UHF RIGHT ANGLE MALE TO FEMALE (UG-646) (M-LA-PJ)

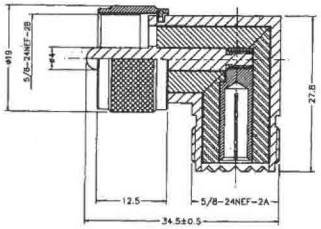

U-507 UHF RIGHT ANGLE MALE TO FEMALE (M-LA-PJ)

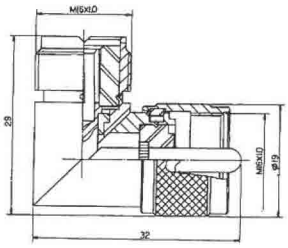

U-593A UHF FEMALE RIGHT ANGLE TWIST TYPE

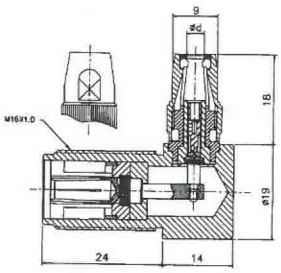

APEX NO.	FOR RG - ( ) /U ( ) D CABLE	ø d	AMPHENOL NO.
U-593A	1.5D, 188	3.5	-

U-591A UHF FEMALE ANGLE TWIST TYPE

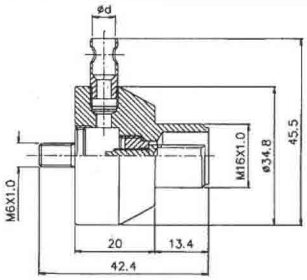

APEX NO.	FOR RG - ( ) /U ( ) D CABLE	ø d	AMPHENOL NO.
U-591A	58, 141, 142	5.8	-

U-592A FEMALE TYPE

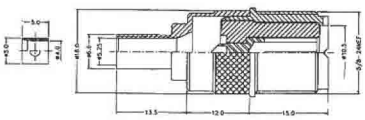

APEX NO.	FOR RG - ( ) /U ( ) D CABLE	ø d	AMPHENOL NO.
U-592A	58, 141, 142	5.4	-
U-592B	59, 62, 71, 140, 210	6.5	-
U-592C	8D	10.8	-
U-592D	5D	7.8	-
U-592E	1.5D	3.4	-

UHF(M)

U-587 UHF MALE SCREW LOOK TYPE

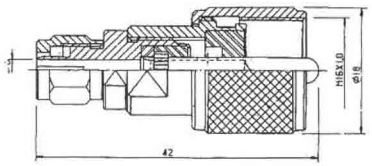

APEX NO.	FOR RG - ( ) /U ( ) D CABLE	ø d	AMPHENOL NO.
U-587A	58, 141, 142	3.2	
U-587B	8U	7.6	
U-587C	7C-2V	7.5	

U-584 UHF FEMALE SOLDERESS TYPE

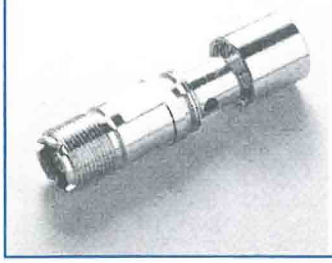

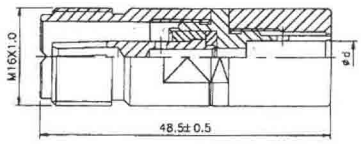

APEX NO.	FOR RG - ( ) /U ( ) D CABLE	ø d	AMPHENOL NO.
U-584A	58U	5.4	-
U-584B	8U	10.8	

U-579 UHF MALE TWIST TYPE

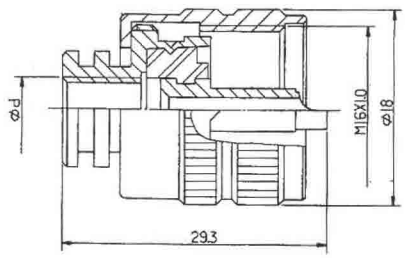

APEX NO.	FOR RG - ( ) /U ( ) D CABLE	ø d	AMPHENOL NO.
U-579A	58, 141, 142	5.4	-
U-579B	59, 62, 71, 140, 210	6.5	-
U-579C	8D	10.8	-
U-579D	5D	7.8	-
U-579E	1.5D	3.4	-

U-582 UHF MALE RIGHT TWIST TYPE

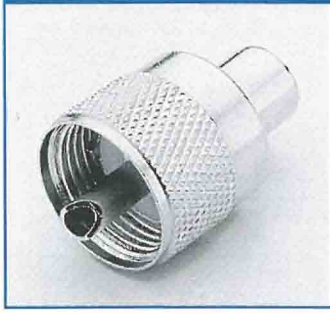

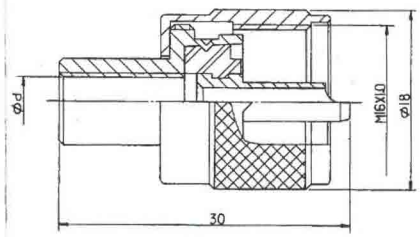

APEX NO.	FOR RG - ( ) /U ( ) D CABLE	ø d	AMPHENOL NO.
U-582A	58, 141, 142	5.4	-
U-582B	59, 62, 71, 140, 210	6.5	-
U-582C	8D	10.8	-
U-582D	5D	7.8	-
U-582E	1.5D	3.4	-

U-596 UHF MALE SCREW LOOK TYPE

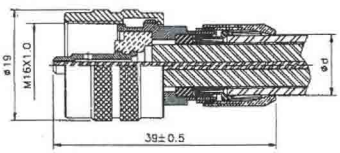

APEX NO.	FOR RG - ( ) /U ( ) D CABLE	ø d	AMPHENOL NO.
U-596A	7C-2V	10.5	-
U-596B	5C-2V	8.7	-

UHF (M) CRIMP

U-513 UHF MALE CRIMP TYPE

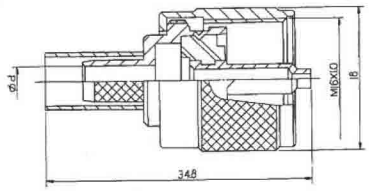

APEX NO.	FOR RG - ( ) /U ( ) D CABLE	ø d	AMPHENOL NO.
U-513A	58, 141, 142	3.2	-
U-513B	59, 62, 71, 140, 210	3.9	-
U-513C	8	7.5	83-8DCP

U-526 UHF MALE CRIMP TYPE

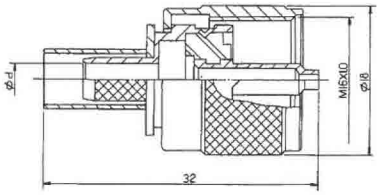

APEX NO.	FOR RG - ( ) /U ( ) D CABLE	ø d	AMPHENOL NO.
U-526A	58, 141, 142	3.2	-
U-526B	59, 62, 71, 140, 210	3.9	-

U-543 UHF FEMALE CRIMP TYPE

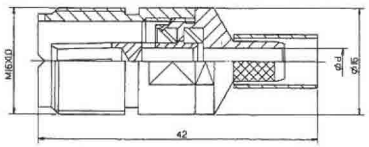

APEX NO.	FOR RG - ( ) /U ( ) D CABLE	ø d	AMPHENOL NO.
U-543A	58, 141, 142	3.2	-
U-543B	59, 62, 71, 140, 210	3.9	-

U-548 UHF MALE CRIMP TYPE

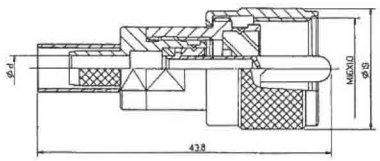

APEX NO.	FOR RG - ( ) /U ( ) D CABLE	ø d	AMPHENOL NO.
U-548A	58, 141, 142	3.2	-
U-548B	59, 62, 71, 140, 210	3.9	-
U-548C	5D	8.7	-

U-524 MINI UHF MALE CRIMP TYPE

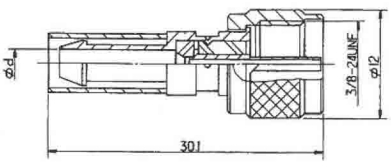

APEX NO.	FOR RG - ( ) /U ( ) D CABLE	ø d	AMPHENOL NO.
U-524A	58, 141, 142	5.4	-
U-524B	59, 62, 71, 140, 210	6.5	-

UHF(M)

U-580 UHF MALE CRIMP TYPE

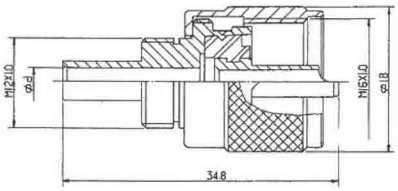

APEX NO.	FOR RG - ( ) /U ( ) D CABLE	ø d	AMPHENOL NO.
U-580A	58, 141, 142	5.4	-
U-580B	59, 62, 71, 140, 210	6.5	-
U-580C	8D	10.8	-
U-580D	5D	7.8	-
U-580E	1.5D	3.4	-

U-501 UHF FEMALE CLAMP TYPE

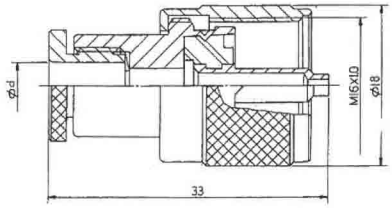

APEX NO.	FOR RG - ( ) /U ( ) D CABLE	ø d	AMPHENOL NO.
U-501A	58, 141, 142	5.4	-
U-501B	59, 62, 71, 140, 210	6.5	-

U-541 UHF MALE CLAMP TYPE

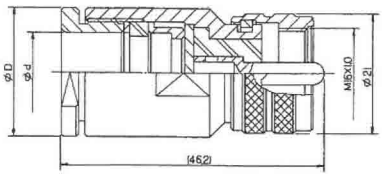

APEX NO.	FOR RG - ( ) /U ( ) D CABLE	ø d	AMPHENOL NO.
U-541A	3D	6.9	-
U-541B	5D	8.7	-
U-541C	8D	11.6	-
U-541D	10D	13.6	-
U-541E	12D	16.4	-

U-550 UHF FEMALE CHASSIS CLAMP TYPE

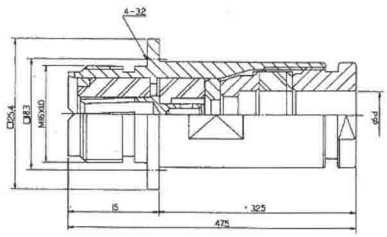

APEX NO.	FOR RG - ( ) /U ( ) D CABLE	ø d	AMPHENOL NO.
U-550A	3D	6.9	-
U-550B	5D	8.7	-
U-550C	8D	11.6	-
U-550D	10D	13.6	-
U-550E	12D	16.4	-

UHF (M) MOLDING

U-502 UHF MALE MOLDING TYPE

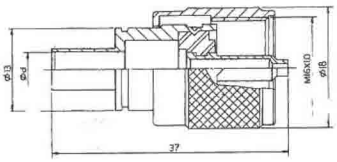

APEX NO.	FOR RG - ( )/U ( ) D CABLE	ø d	AMPHENOL NO.
U-502A	58, 141, 142	3.2	-
U-502B	59, 62, 71, 140, 210	3.9	-

U-514 UHF MALE MOLDING TYPE

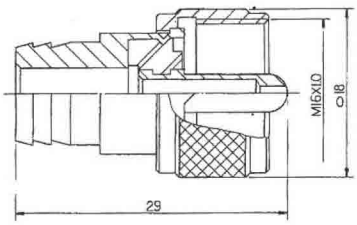

APEX NO.	FOR RG - ( )/U ( ) D CABLE	ø d	AMPHENOL NO.
U-514A	58, 141, 142	3.2	-
U-514B	59, 62, 71, 140, 210	3.9	-

U-525 UHF FEMALE MOLDING TYPE

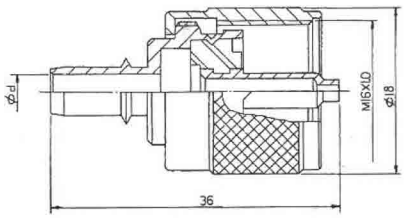

APEX NO.	FOR RG - ( )/U ( ) D CABLE	ø d	AMPHENOL NO.
U-525A	58, 141, 142	3.2	-
U-525B	59, 62, 71, 140, 210	3.9	-

U-559 UHF MALE SCREW LOOK TYPE

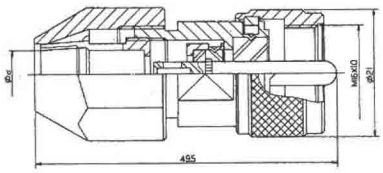

APEX NO.	FOR RG - ( )/U ( ) D CABLE	ø d	AMPHENOL NO.
U-559A	58, 141, 142	5.4	-
U-559B	59, 62, 71, 140, 210	6.5	-
U-559C	8D	12.2	-
U-559D	10D	14.4	-
U-559E	12D	16.4	-

Q-035 ANTI-THEFT (METAL) DEVICE

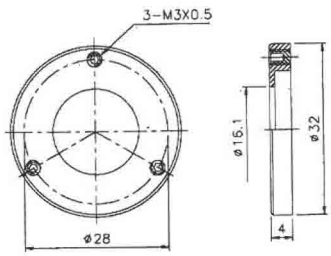

UHF (M) ANT

U-505 UHF MALE ANT CONNECTORS

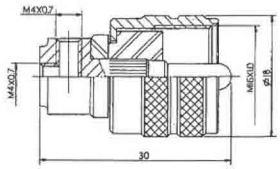

U-518 UHF MALE TAPER TYPE

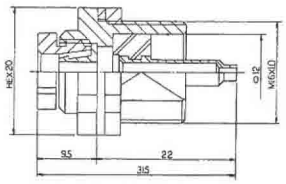

U-529 UHF MALE ANT CONNECTORS

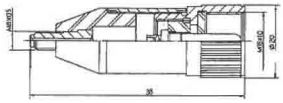

U-530 UHF MALE ANT CONNECTORS

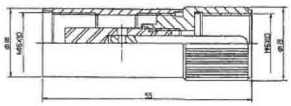

U-535 UHF MALE ANT CONNECTORS

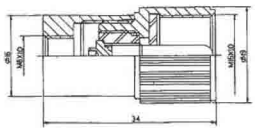

U-546 UHF THREE-WAY ANT CONNECTORS

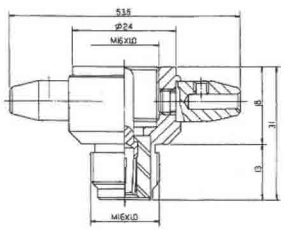

UHF (M) ANT

U-573 UHF MALE ANT CONNECTORS

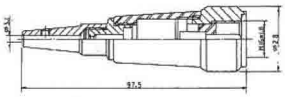

U-574 UHF MALE ANT CONNECTORS

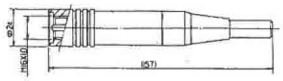

U-575 UHF MALE ANT CONNECTORS

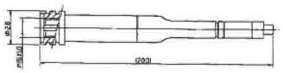

U-576 UHF MALE ANT CONNECTORS

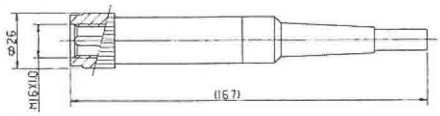

U-577 UHF MALE ANT CONNECTORS

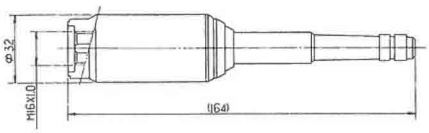

U-578 UHF MALE ANT CONNECTORS

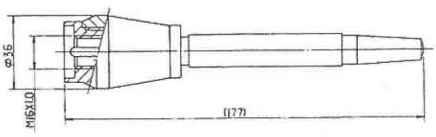

UHF (M) ADAPTOR

U-504 UHF DOUBLE-FEMALE (M-A-JJ)

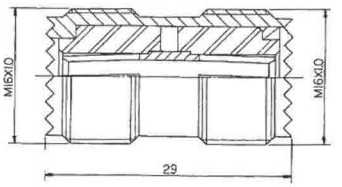

U-517A UHF DOUBLE-FEMALE (M-A-JJ)

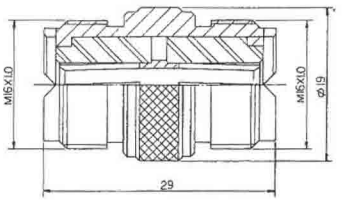

U-504A UHF DOUBLE-FEMALE (M-A-JJ)

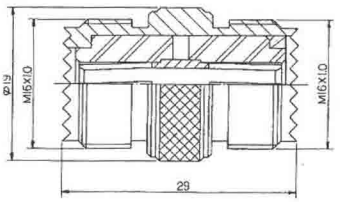

U-549 UHF DOUBLE-FEMALE (M-A-JJ)

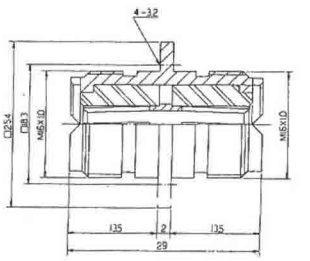

U-504B UHF DOUBLE-FEMALE (M-A-JJ)

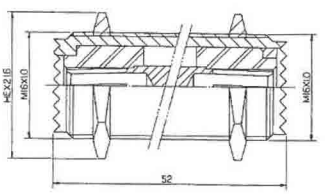

U-561 UHF MALE TO FEMALE (MP-JJ)

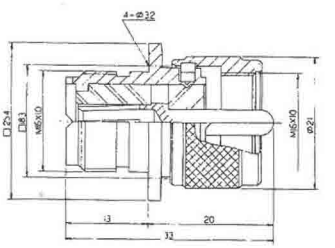

U-510 UHF DOUBLE-MALE (M-A-PP)

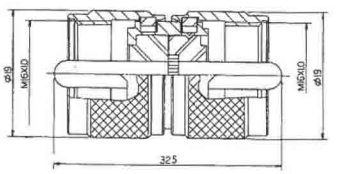

U-508 UHF FEMALE TO RCA MALE (MJ-RCAP)

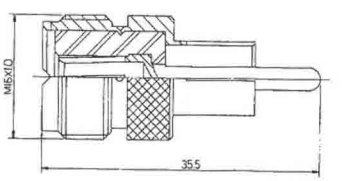

U-517 UHF DOUBLE-FEMALE (PL-258) (M-A-JJ)

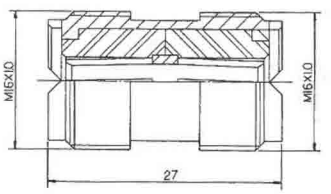

U-515 UHF MALE TO RCA FEMALE (MP-RCAJ)

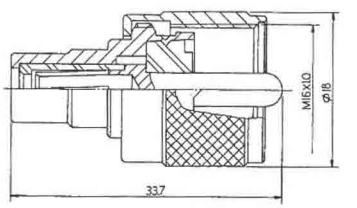

UHF (M) ADAPTOR

U-528 UHF FEMALE TO FEMALE (MJ-FJ)

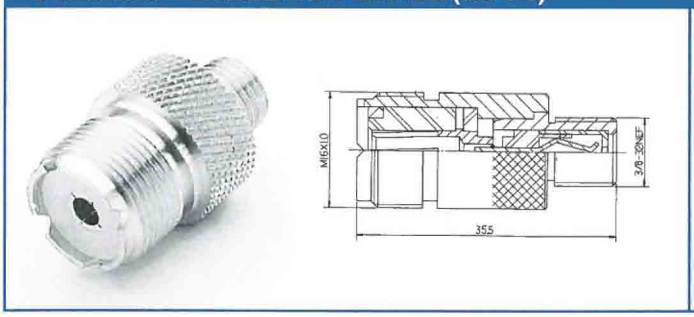

U-570 UHF MALE TO MALE (MP-FP)

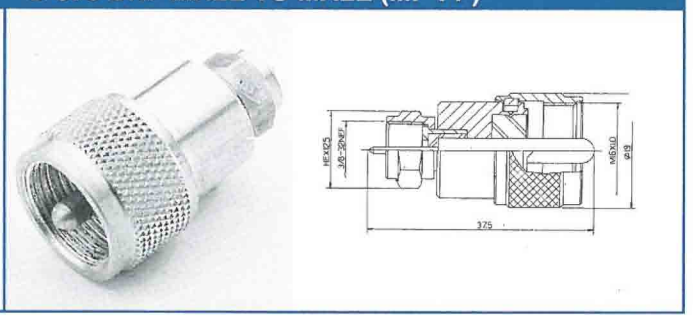

U-534 UHF MALE TO FEMALE (MP-FJ)

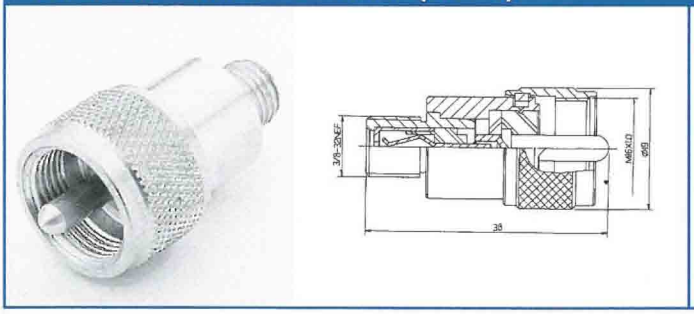

U-542 UHF MALE TO FEMALE (MP-NJ)

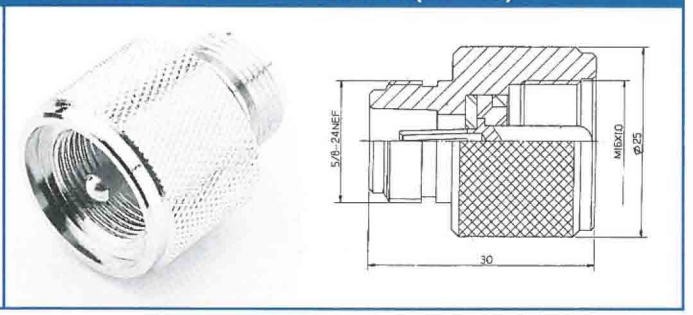

U-564 UHF FEMALE TO RCA FEMALE (MJ-RCAJ)

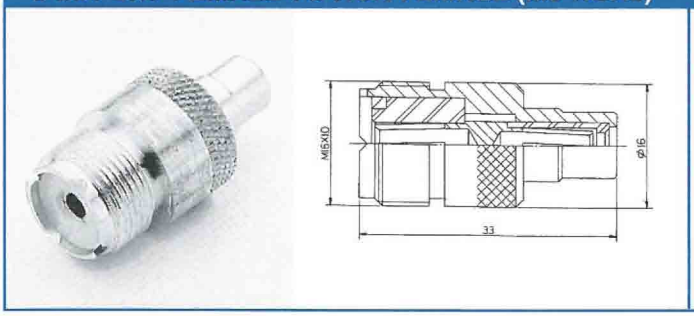

U-566 UHF FEMALE TO N MALE (MJ-NP)

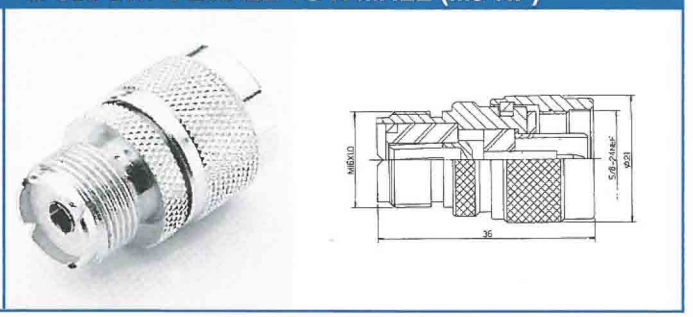

U-565 UHF MALE TO RCA MALE (MP-RCAP)

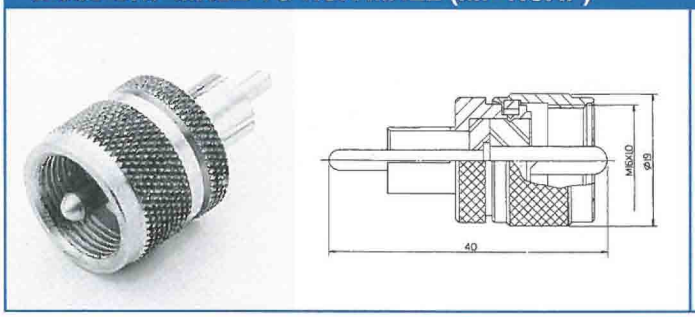

U-567 UHF MALE TO N MALE (MP-NP)

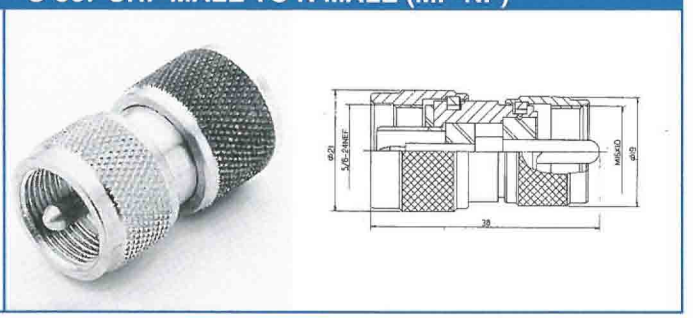

U-563 UHF FEMALE TO F MALE (MJ-FP)

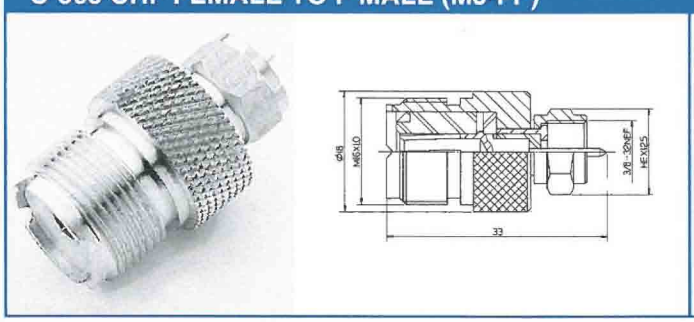

U-568 UHF FEMALE TO N FEMALE (MJ-NJ)

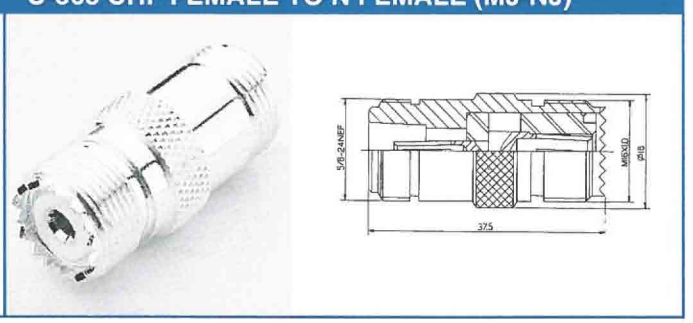

UHF (M) ADAPTOR

U-569 UHF MALE TO N FEMALE (UG-83B-U) (MP-NJ)

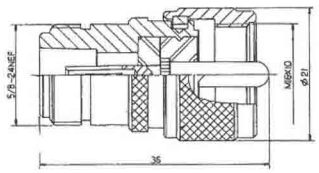

U-520 DOUBLE UHF FEMALE SINGLE MALE (M-TA-JPJ)

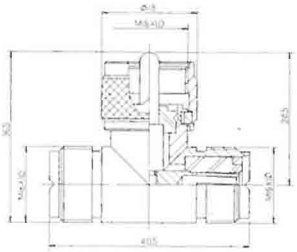

U-562 UHF FEMALE TO TNC FEMALE (MJ-TNCJ)

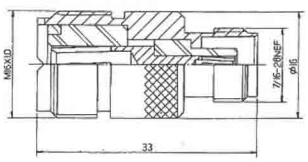

U-588 MINI UHF MALE TO UHF FEMALE

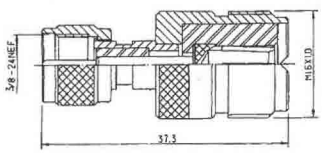

U-560 UHF MALE TO BNC MALE (MP-BNCP)

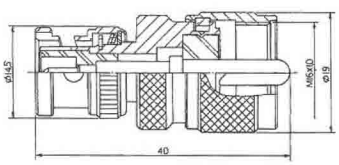

U-595A UHF MALE TO T FEMALE (MP-TJ)

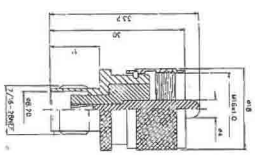

U-516 UHF THREE-FEMALE (M-TA-JJJ)

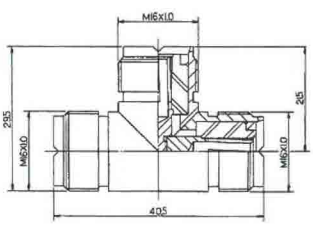

U-C6 UHF MALE CAP (M-JC) UHF (M) CAP

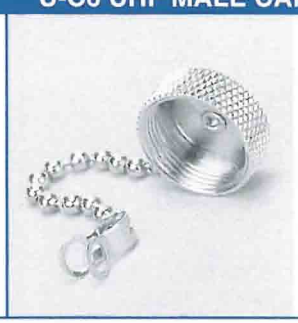

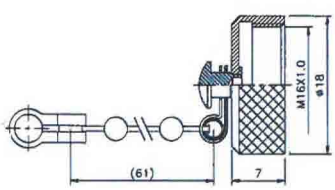

U-597 UHF TO S0239

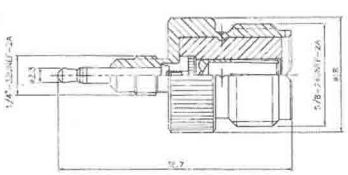

U-598 UHF TO S0239

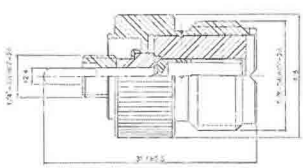

UHF (M) CAP

U-C1 UHF FEMALE CAP (M-JC)

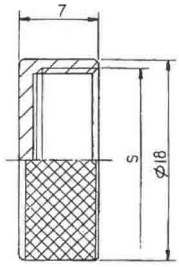

U-533 UHF FEMALE CONNECTOR

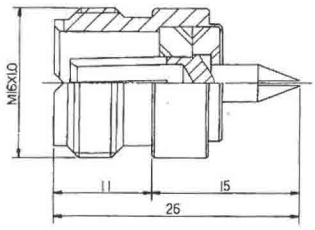

PLT-16-RCa (U-C2) UHF FEMALE CAP (M-JC)

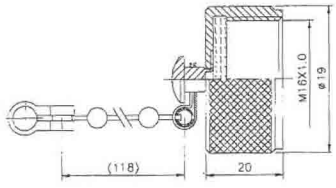

U-589 UHF FEMALE RECEPTACLE

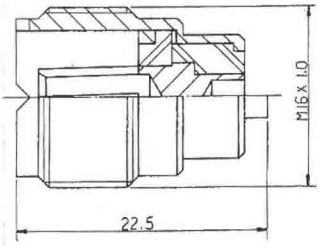

U-C3 UHF MALE CAP (M-PC)

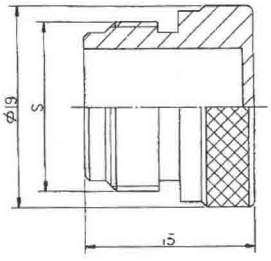

U-581 UHF FEMALE BULKHEAD RECEPTACLE

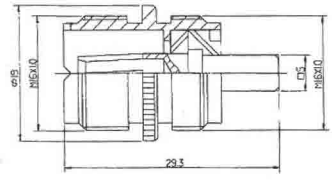

U-C4 UHF MALE CAP (M-PC)

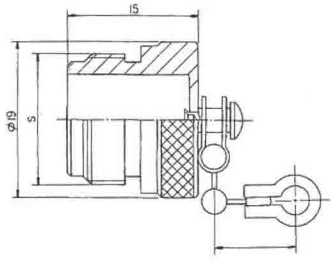

U-583 UHF FEMALE BULKHEAD RECEPTACLE

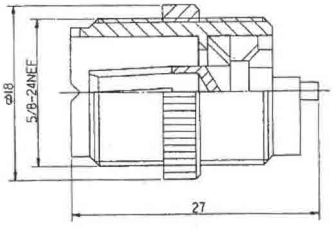

U-C5 UHF MALE CAP (M-JC)

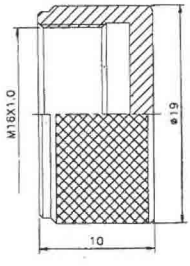

U-590 UHF FEMALE CONNECTOR

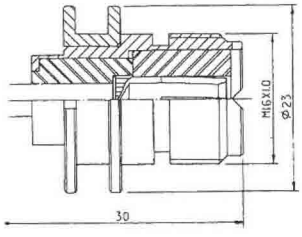

UHF (M) BULKHEAD RECEPTACLE

U-506 UHF FEMALE BULKHEAD RECEPTACLE

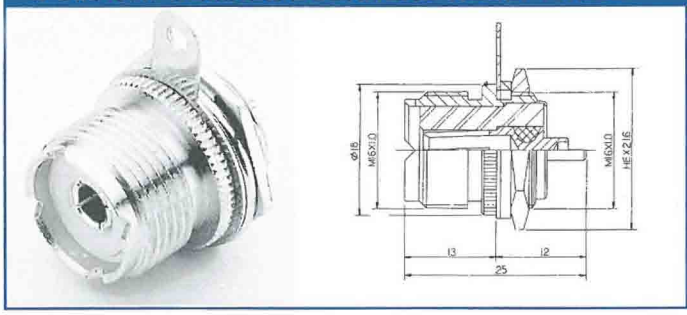

U-545 UHF FEMALE BULKHEAD RECEPTACLE

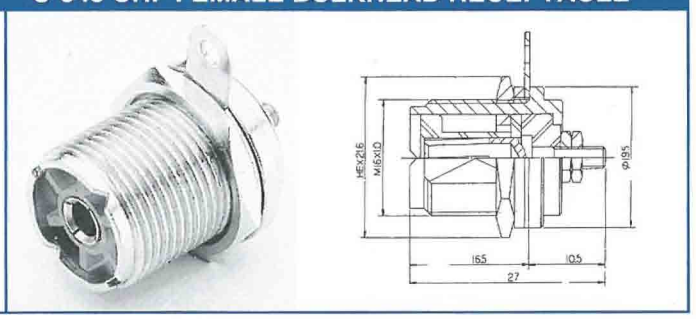

U-511 UHF FEMALE BULKHEAD RECEPTACLE (SO-239/SH)

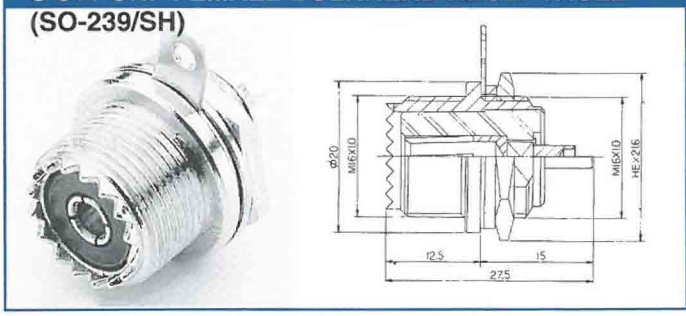

U-547 UHF FEMALE BULKHEAD RECEPTACLE (SO-266)

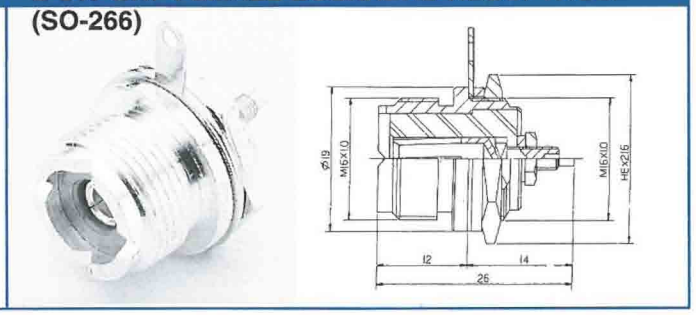

U-521 UHF FEMALE BULKHEAD RECEPTACLE (UG-266)

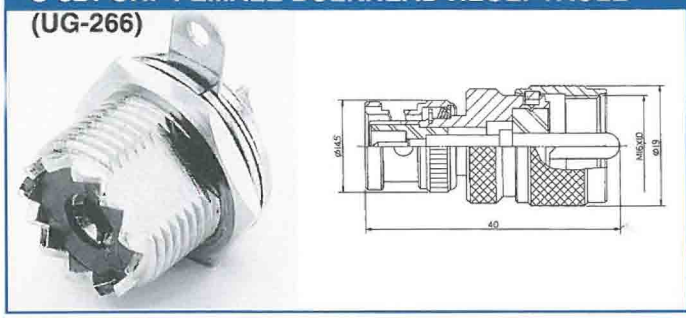

U-531 UHF MALE BULKHEAD RECEPTACLE

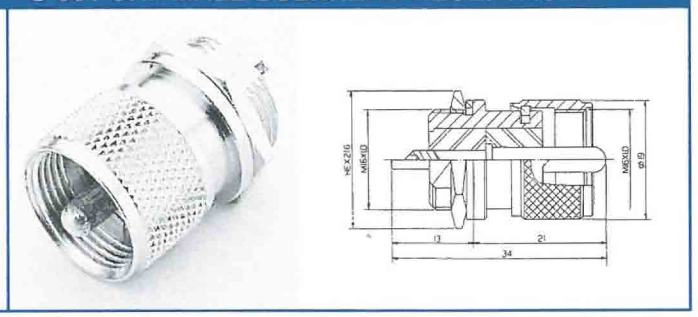

U-512 UHF FEMALE RECEPTACLE (SO-239)

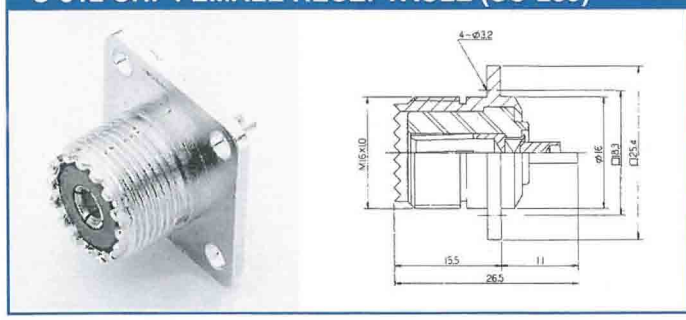

U-551 UHF MALE CHASSIS MOUNT

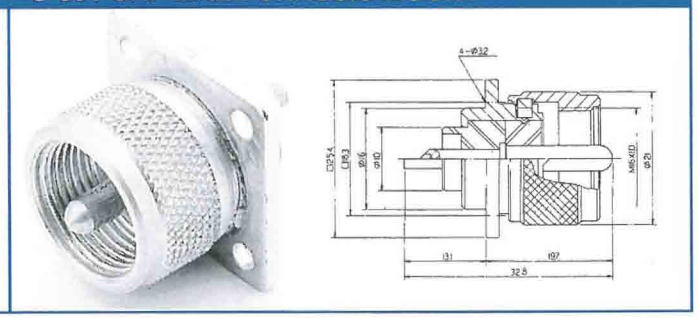

U-527 UHF FEMALE RECEPTACLE

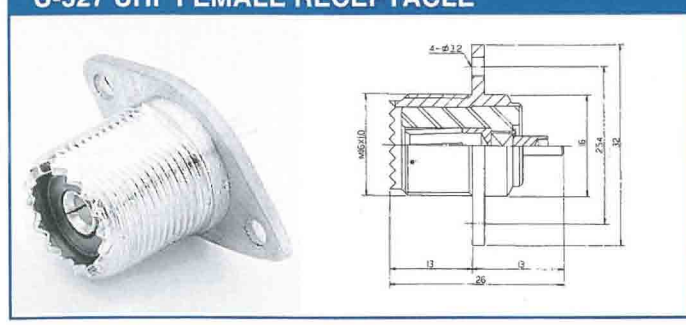
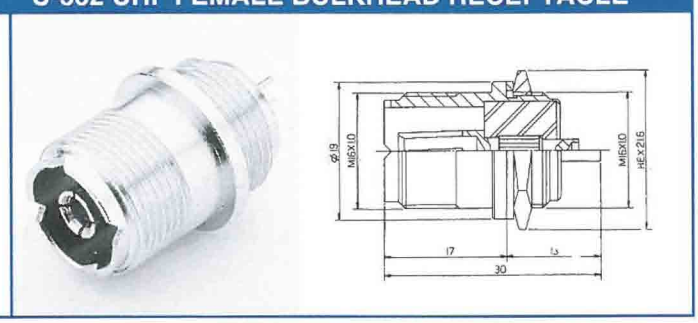
U-532 UHF FEMALE BULKHEAD RECEPTACLE